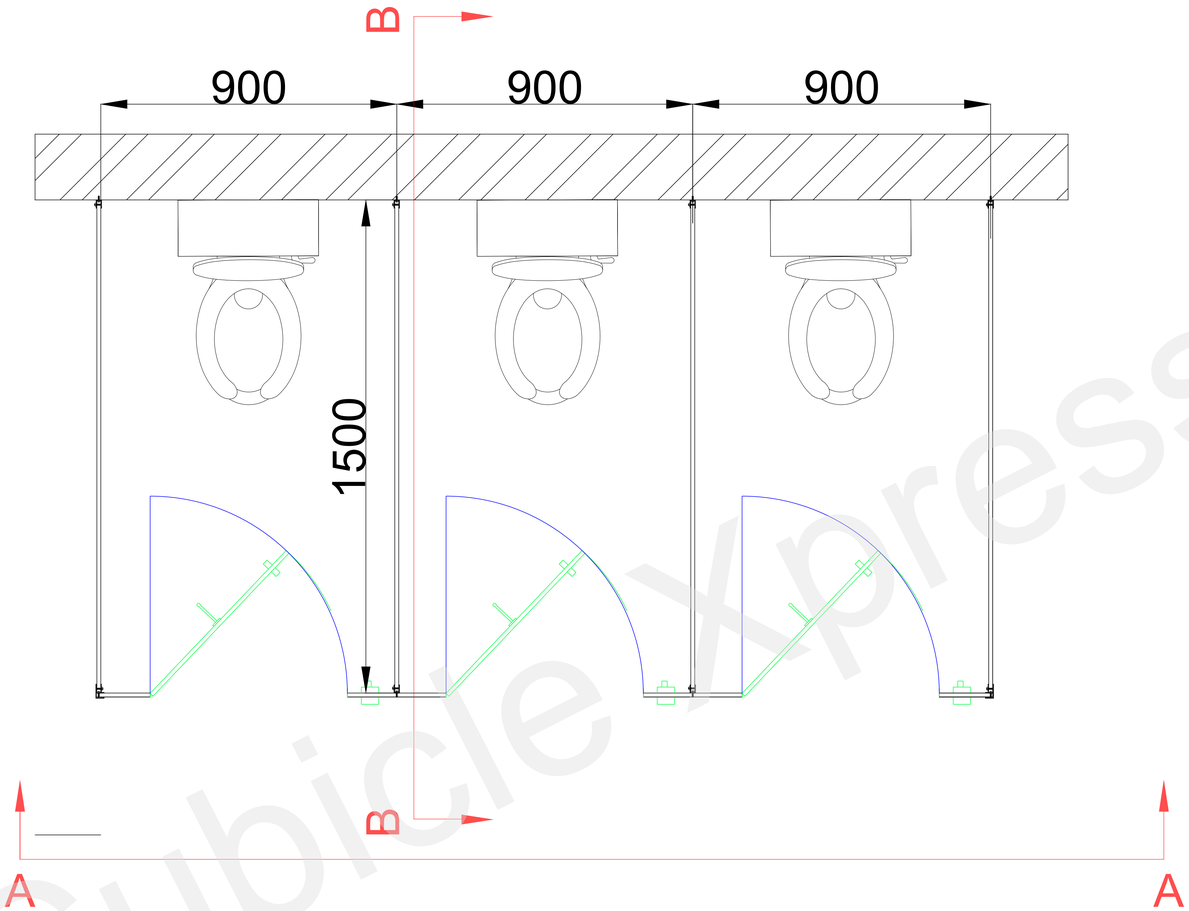

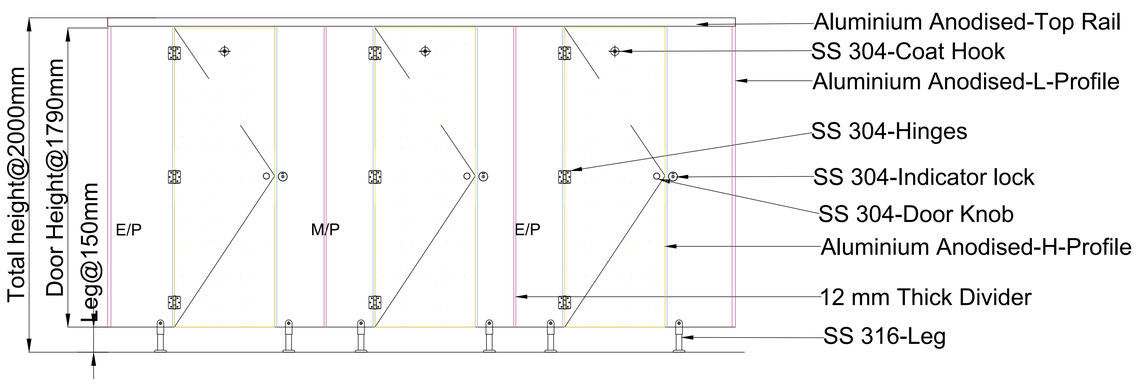

ELEVATION-AA

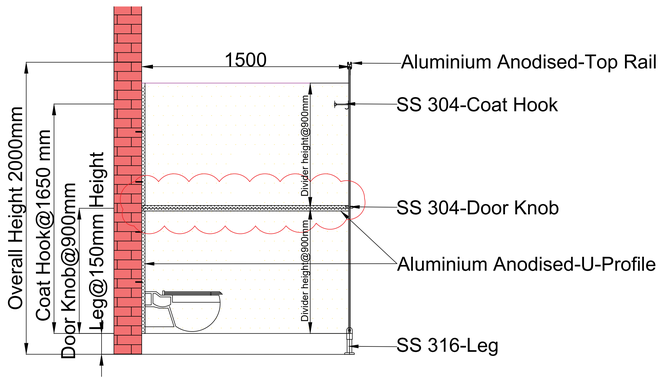

SECTION-BB

Note :
All Dimensions are in mm unless specified

☐	A	Approved
☐	B	Approved as noted
☐	C	Revise & Resumbit
☐	D	Information

Floor Details :

Title :
Cubicle 3 - Panel To Panel

Note:
Total No of cubicles : 03 No's

Sr	Accessories	Material
1	Panel	12 mm Thick
2	Divider	12 mm Thick
3	Profiles	Alu. Anodised
4	Coat Hook	SS 304 Grade
5	Hinges	SS 304 Grade
6	Door Knob	SS 304 Grade
7	IndicatorLock	SS 304 Grade
8	Leg	SS 316 Grade

Laminate:
Body *
Door *

Client :

Project:

	Name	Date	Sign
S Visit			
DRWN			
CHKD			

Released for approval of
- ☑ Shop Drawing
- ☐ Construction
- ☐ As Built

CUBICLE XPRESS

This is the sole property of Cubiclexpress. It should not copied & changed without written approval.

Cubicle Xpress

Note:- this drawing is intended only for the recipient not for the circulation